All Nations University

DEPARTMENT OF BIOMEDICAL ENGINEERING

Presenter(s): Atsu Doe Esther – ANU21370188; Otsyina Magdalene – ANU24420386; Oppong Boateng Jeffery – ANU24430382

Project Title: Design and Development of a Flexible and Biocompatible Infrared Light Therapy Bandage for Wound Healing

Supervisor: Dr. Eric Droepenu, Department of Biomedical Engineering, All Nations University

Abstract

This project presents the design and fabrication of a flexible, biocompatible infrared (IR) light therapy bandage for wound healing. The bandage integrates low-level infrared LEDs onto a cotton substrate, powered by a lithium-ion battery and regulated by a digital thermostat and MOSFET timer relay for controlled heat output. Experimental results showed a gradual rise in temperature from 28.8 °C to 42.7 °C and irradiance of 31 µW/cm²/nm—values within the optimal therapeutic range (40–43 °C). The device safely enhances blood circulation, tissue regeneration, and collagen synthesis, demonstrating potential for both clinical and home-based wound care.

Introduction

- **Chronic wounds** such as diabetic ulcers and pressure sores remain major healthcare challenges.
- **Traditional dressings** only protect the wound surface and do not actively promote healing.
- **Infrared Light Therapy (ILT)** enhances cellular metabolism and tissue repair through **photobiomodulation**.
- Current ILT devices are often **rigid, bulky, and expensive,** limiting their usability for continuous therapy.
- This project aims to develop a **flexible, wearable infrared (IR) bandage that delivers continuous, localized therapy efficiently**.

Methods

- **Design:** The infrared bandage was built on a cotton elastic base for flexibility and comfort.
- **Light Source:** Infrared LEDs (850 nm) provided controlled therapeutic radiation.
- **Control Circuit:** A digital thermostat and MOSFET timer relay regulated exposure time and ensured precise light delivery within the therapeutic range (40–43 °C).
- **Power Supply:** A 12 V lithium-ion battery powered the system for portable operation.
- **Testing:** The device was tested for temperature response and irradiance performance to confirm safe and effective operation.

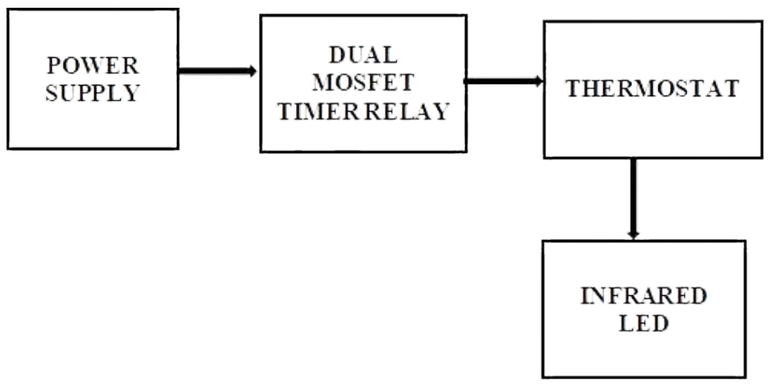

Figure 1: An image of the block diagram of the infrared bandage.

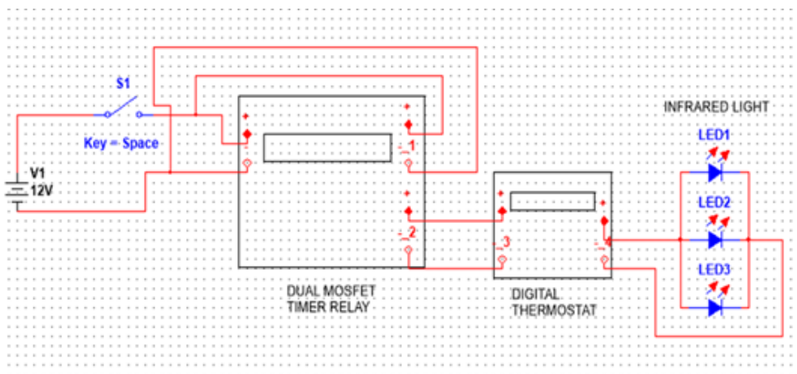

Figure 2: An image of the circuit diagram of the infrared bandage.

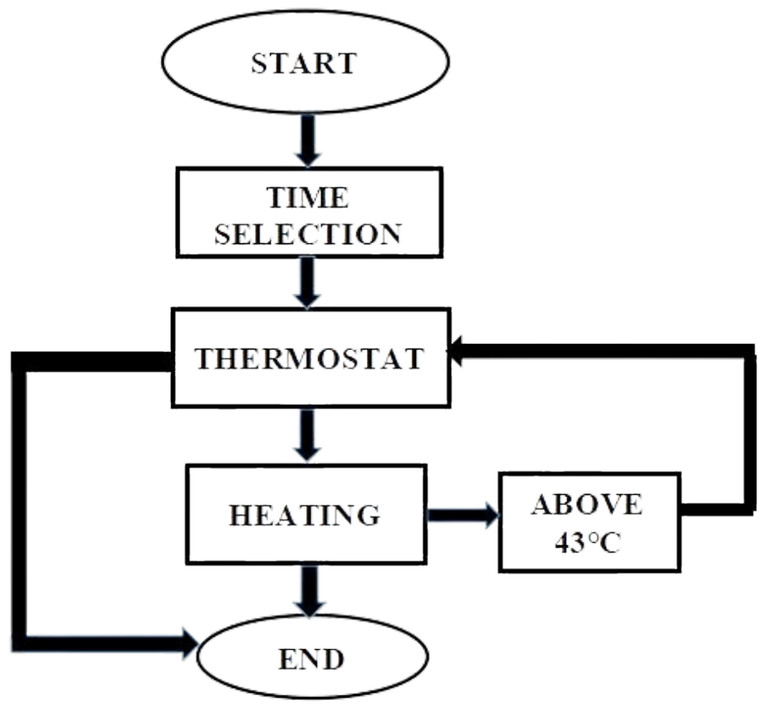

Figure 3: An image of the flowchart of the infrared bandage.

Results

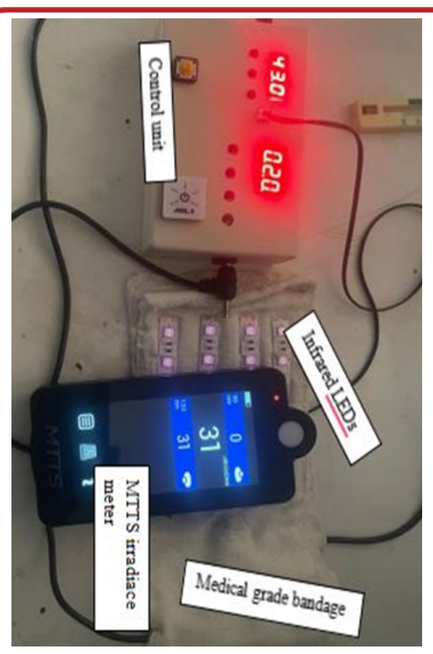

Figure 4: Testing of prototype irradiance

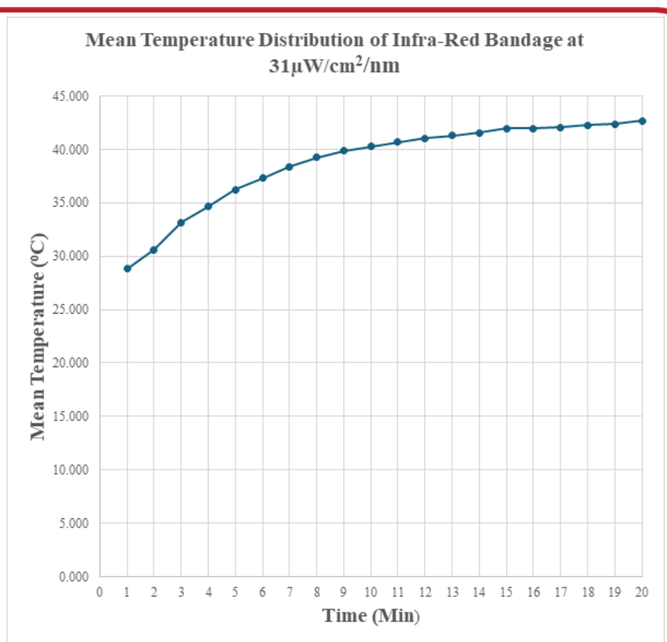

Figure 5: A graph of temperature variation with respect to time.

Conclusions and Next Step

The infrared light therapy bandage successfully provides controlled thermal and optical energy for wound healing. It promotes circulation, tissue regeneration, and patient comfort while being portable and cost-effective.

Next Steps: Integrate wireless monitoring and biosensors to enable automatic feedback control and data logging for clinical and home use.

References

1. Hamblin, M. R. (2017). Mechanisms and applications of the anti-inflammatory effects of photobiomodulation. *AIMS Biophysics, 4(3), 337–361.*
2. Patel, S., Ershad, F., Zhao, M., Isseroff, R. R., Duan, B., Zhou, Y., Wang, Y., & Yu, C. (2022). Wearable electronics for skin wound monitoring and healing. *Soft Science, 2(2),13. https://doi.org/10.20517/ss.2022.13*
3. Haba, D., Itabashi, M., Tamai, N., Tobe, H., Sanada, H., & Nakagami, G. (2024). Effectiveness of Vibration Therapy for Hard-to-Heal Wounds in Clinical Study: A Scoping Review. *Chronic Wound Care Management and Research, 11, 1–12. https://doi.org/10.2147/cwcmr.s423054*
4. Crema, A., Scarpa, C., Sonda, R., Rizzato, S., Masciopinto, G., & Bassetto, F. (2021). Fluorescent Light Energy and Chronic Lesions: A Winning Association. *Plastic and Reconstructive Surgery - Global Open, 9(7), E3667. https://doi.org/10.1097/GOX.0000000000003667*

Acknowledgements

We express our sincere gratitude to the Almighty God, our supervisor Dr. Eric Droepenu, Dr. Mercy Adusei Boatemaa, the Department of Biomedical Engineering, and our families and friends for their unwavering support throughout

Contact info

Department of Biomedical Engineering
All Nations University, Koforidua, Ghana